SR2 & SR3 INSULATED ROOF PANELS

GENERAL INSTALLATION GUIDE

BALA SOCKALINGAM
LICENSE
No. 62240
STATE OF
FLORIDA
PROFESSIONAL ENGINEER

ALL WEATHER
INSULATED PANELS

2023.10.21
13:38:00
-05'00'

929 ALDRIDGE ROAD
VACAVILLE, CA 95688
PHONE: (707) 359-2280
FAX: (707) 359-2286
WWW.AWIPANELS.COM

GENERAL INSTALLATION GUIDE

DISCLAIMER:

ALL WEATHER INSULATED PANELS (AWIP) SHALL NOT BE RESPONSIBLE FOR ANY DAMAGE AND INJURIES INCURRED WHILE HANDLING AND/OR INSTALLING THE PANELS, TRIM AND ACCESSORIES. ON-SITE PERSONNEL SHALL FOLLOW THE APPROPRIATE SAFETY PROTOCOLS AS DETERMINED BY THE RELEVANT GOVERNING BODIES.

PLEASE REFER TO PROJECT-SPECIFIC DETAILS IS ALL WEATHER INSULATED PANELS HAS PROVIDED SHOP / ERECTION DRAWINGS. SHOP DRAWINGS PREPARED BY AWIP SHOW FASTENING DETAILS, PANEL LAYOUTS, WALL ELEVATIONS, ROOF PLANS AND / OR CEILING PLANS ONLY AND REFLECT THE DESIGN CRITERIA LISTED ON THE COVER PAGE. THE SHOP DRAWINGS ARE INTENDED TO BE A GUIDE FOR MINIMUM ACCEPTABLE INSTALLATION PROCEDURES AND TO INDICATE THE QUANTITY, SIZE AND MATERIAL SPECIFICATIONS OF PRODUCTS FURNISHED BY AWIP FOR THE REFERENCED PROJECT. THEY DO NOT REPLACE OR SUPPLANT SPECIFICATIONS OR NOTES ON STRUCTURAL DRAWINGS. IT IS THE **CUSTOMER'S** RESPONSIBILITY TO VERIFY AND APPROVE THE DESIGN LOADS SHOWN ON THE AWIP SHOPS DRAWINGS **AND / OR** PROVIDE AWIP WITH ANY ADDITIONAL DESIGN LOADS THAT NEED TO BE TAKEN INTO CONSIDERATION.

AWIP IS ONLY RESPONSIBLE FOR SHOWING AND PROVIDING MATERIALS THAT ARE INCLUDED IN THE SALES ORDER ACKNOWLEDGEMENT. THE MATERIALS FURNISHED BY AWIP HAVE BEEN APPROVED FOR THE PURPOSES SHOWN IN THE AWIP SHOP DRAWINGS. MATERIALS NOT PROVIDED BY AWIP MAY BE SHOWN IN THE AWIP SHOP DRAWINGS FOR INFORMATIONAL OR CLARITY PURPOSES. THE AWIP SHOP DRAWINGS ARE BASED OFF INFORMATION PROVIDED TO THE AWIP DETAILING TEAM. DETAILS AND DIMENSIONS MUST BE VERIFIED BY THE **CUSTOMER**. AWIP SHALL NOT BE RESPONSIBLE OR LIABLE FOR INCORRECT DIMENSIONS OR CONDITIONS AFTER SIGNED APPROVED SHOP DRAWINGS ARE RETURNED.

UNLESS NOTED OTHERWISE, THIS PROJECT HAS BEEN DESIGNED BASED ON **AMBIENT BUILDING** CONDITIONS AND NOT AS A COOLER OR FREEZER BUILDING. IF THIS IS NOT THE CASE, PLEASE NOTIFY YOUR AWIP PROJECT MANAGER IMMEDIATELY AND PROVIDE THE INTERIOR TEMPERATURE(S).

DATE: 09/18/17

DRAWN BY: MMF

SR2 & SR3 INSULATED ROOF PANELS
GENERAL INSTALLATION GUIDE

ALL WEATHER INSULATED PANELS
AWIP

HANDLING INSTRUCTIONS:

1.0 ARRIVAL ON SITE

1.1 ALL WEATHER INSULATED PANELS ARE CAREFULLY BUNDLED AND STRETCH-WRAPPED TO PREVENT DAMAGE DURING SHIPPING. THE TRANSPORTATION COMPANY IS RESPONSIBLE FOR DELIVERING THESE COMPONENTS UNDAMAGED. FREIGHT CLAIMS SHOULD BE HANDLED DIRECTLY WITH THE FREIGHT COMPANY.

1.2 WHEN SHIPMENT IS RECEIVED, CHECK EACH ITEM AGAINST THE BILL OF LADING FOR QUANTITY, LENGTH, TRANSIT DAMAGE, ETC. IF SHORTAGE OR DAMAGE IS FOUND, MAKE SURE A NOTATION OF IT IS MADE ON THE BILL OF LADING AND SIGNED BY THE DRIVER. IT IS THE CUSTOMER'S RESPONSIBILITY TO MAKE ANY DAMAGE CLAIM(S).

1.3 PLEASE NOTIFY ALL WEATHER INSULATED PANELS OF ANY ORDER DISCREPANCIES WITHIN 72 HOURS OF DELIVERY. OTHERWISE, ALL WEATHER INSULATED PANELS WILL CONCLUDE THAT THE ORDER WAS COMPLETED SUCCESSFULLY.

1.4 A PANEL PACKING LIST IS PROVIDED FOR EACH BUNDLE AND IS LOCATED WITHIN A SLEEVE ADHERED TO THE SIDE WRAPPING. PLEASE USE THIS DOCUMENT TO CHECK FOR BUNDLE INFORMATION.

1.5 ALL WEATHER INSULATED PANELS WILL GENERALLY ARRIVE IN LARGE, STRETCH-WRAPPED BUNDLES ON FLAT BED TRAILERS. CONSEQUENTLY, THE BUNDLES SHOULD BE OFF-LOADED BY MEANS OF CRANE SYSTEM OR FORKLIFT.

2.0 UNLOADING WITH A FORKLIFT

2.1 ALL PANEL BUNDLES ARE REINFORCED WITH BOTTOM SHEET(S) OF OSB AT LIFTING POINTS TO PREVENT DAMAGE DURING HANDLING. LIFT BUNDLES ONE AT A TIME WITH A FORKLIFT. SEE FIGURE 1 (BELOW) FOR RECOMMENDED LIFTING POINT LOCATIONS. LONG-LENGTH BUNDLES (36'-0" OR LONGER) WILL HAVE FOUR OR MORE LIFTING POINTS (SEE FIGURE 2, BELOW).

2.2 FORK BLADES MUST BE SET TO NOT LESS THAN 48" WIDE.

NOTE: ENSURE THAT FORKS ARE BETWEEN THE 3" FOAM STICKERS AT THE BOTTOM OF EACH BUNDLE.

2.3 DO NOT OVER-ENGAGE FORKS WHEN LIFTING A BUNDLE AS DOING SO MAY DAMAGE THE BUNDLE(S) BEHIND IT.

2.4 6" FOAM BLOCKS MAY BE PLACED ON THE BACK (UPRIGHT) LEG OF THE FORKS TO SOFTEN THE CONTACT BETWEEN THE FORKS AND THE BUNDLE.

2.5 CAUTION STICKERS ARE AFFIXED TO EITHER SIDE OF EACH BUNDLE AS A QUICK ON-SITE REFERENCE FOR OFF-LOADING.

NOTE: EXTREME CARE SHOULD BE TAKEN TO AVOID BUMPING THE PANELS WHEN LIFTING AND MANEUVERING.

3.0 UNLOADING WITH A CRANE

3.1 WHEN MOVING BUNDLE(S) WITH A CRANE, USE AN APPROPRIATE COMBINATION OF SPREADER BARS, SLINGS, AND ANTI-PINCH BOARDS TO SAFELY DISTRIBUTE THE BUNDLE'S WEIGHT. WHEN BUNDLES ARE LONGER THAN 15'-0", IT IS SUGGESTED THAT A PROPERLY DESIGNED AND FABRICATED LIFTING BEAM / SPREADER BAR IS USED.

NOTE: UNLOADING WITH A CRANE IS RECOMMENDED FOR ANY BUNDLES OVER 50'-0" LONG.

3.2 ANTI-PINCH BOARDS SHOULD BE LONG ENOUGH TO SWALLOW THE ENTIRE WIDTH OF THE BUNDLE AND BE PLACED AT THE TOP AND BOTTOM OF THE BUNDLE. USE ONE SET (TOP AND BOTTOM) OF ANTI-PINCH BOARDS PER SLING.

3.3 THE SIZE AND QUANTITY OF THE SPREADER BAR(S) MAY VARY DEPENDING ON THE LENGTH AND WEIGHT OF THE BUNDLE(S). LONG-LENGTH BUNDLES (36'-0" OR LONGER) WILL HAVE FOUR OR MORE LIFTING POINTS (SEE FIGURE 2, BELOW).

3.4 ONLY LIFT ONE BUNDLE AT A TIME.

"STANDARD-LENGTH" BUNDLES
(10'-0" OR LONGER)

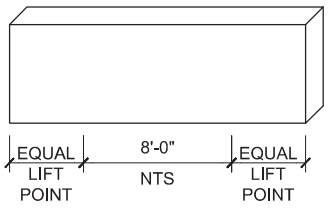

USE ONE FORKLIFT TO LIFT BUNDLES AT THE LIFT POINT SECTIONS.

FIGURE 1

"LONG-LENGTH" BUNDLES
(36'-0" OR LONGER)

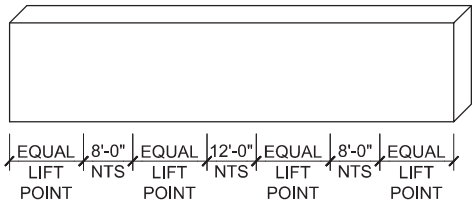

WHEN HANDLING LONG-LENGTH BUNDLES, BE CAREFUL NOT TO POSITION YOUR LIFT AT THE CENTER OF THE BUNDLES AS THIS MAY DAMAGE THE PANELS. USE TWO FORKLIFTS (OR CRANE STRAPS) TO LIFT BUNDLE AT THE LIFT POINT SECTIONS.

FIGURE 2

SHEET: 3 OF 11

DATE: 09/18/17

DRAWN BY: MMF

SR2 & SR3 INSULATED ROOF PANELS GENERAL INSTALLATION GUIDE

ALL WEATHER INSULATED PANELS

AWIP

4.0 MANUALLY UNLOADING

4.1 ON SMALL PROJECTS, UNLOADING OF THE PANELS MAY BE DONE BY HAND.

NOTE: SPECIAL CARE SHOULD BE TAKEN WHEN HANDLING PANELS. ALWAYS LIFT THE PANELS WHEN REMOVING FROM A BUNDLE, NEVER DRAG THEM.

4.2 AVOID CARRYING THE PANEL FROM A FLAT ORIENTATION, ESPECIALLY LONG PANELS WHICH ARE MORE PRONE TO BENDING DAMAGE. IF NECESSARY, USE MORE THAN TWO PERSONS TO EVENLY SUPPORT THE PANEL.

4.3 TO PREVENT JOINT DAMAGE, NEVER LIFT THE PANEL FROM THE FLAT POSITION BY THE SIDE JOINT OR THE OVERLAPPING RIB. DOING SO MAY CAUSE THE METAL AND FOAM TO SEPARATE.

NOTE: ALL PERSONNEL PERFORMING THESE TASKS MUST WEAR PROPER CLOTHING AND PROTECTIVE EQUIPMENT AT ALL TIMES.

STORAGE INSTRUCTIONS:

5.0 SITE STORAGE

5.1 IF THE PANELS ARE TO BE USED IMMEDIATELY, THE BUNDLES SHOULD BE PLACED AT THE PRE-PLANNED LOCATIONS AROUND THE PERIMETER OR THE BUILDING, AS CLOSE AS POSSIBLE TO THE CORRESPONDING WORK AREAS. PLACE BUNDLES AS FAR PRACTICAL FROM THE SITE TO AVOID POSSIBLE DAMAGE FROM LATER SITE MANEUVERING OR UNDUE HANDLING.

5.2 IDEALLY, THE BUNDLES SHOULD BE STORED UNDER A TEMPORARY SHELTER WITH THE PLASTIC REMOVED FROM THE TOP AND SIDES OF THE BUNDLE. SITE STORAGE TIME SHOULD BE MINIMIZED.

5.3 IF THE BUNDLES CANNOT BE STORED IN A COVERED LOCATION, IT IS NECESSARY TO CUT THE OUTSIDE PLASTIC WRAPPING AND ARRANGE THE BUNDLES SUCH THAT THEY ARE INCLINED AT A (MINIMUM) 1:12 SLOPE SO THAT WATER DOES NOT ACCUMULATE, AND MOISTURE BUILD UP BETWEEN PANELS IS AVOIDED. THE CONTINUOUS CUT SHOULD BE MADE ALONG THE WIDTH OF THE BUNDLE; CUT 1'-0" SLITS 5'-0" O/C ALONG THE LENGTH OF THE BUNDLE (SEE FIGURE 3, BELOW). DO NOT STORE FOR LONGER THAN 30 DAYS. MOISTURE BETWEEN PANELS CAN CAUSE CORROSION AND OXIDATION OF PAINTED SURFACES REFERRED TO AS "WET STACK".

NOTE: IF TEMPORARY SHELTER IS NOT AVAILABLE, OUR PANELS ARE PACKAGED WITH PLASTIC STRETCH WRAP AND EXPANDED POLYSTYRENE BOARD. IT IS, HOWEVER, A REQUIREMENT THAT ADDITIONAL PROTECTION BE PROVIDED TO PROTECT THE PANELS FROM WET WEATHER CONDITIONS DURING TRANSIT AND AT THE JOBSITE. STANDING WATER ON STORED AND/OR BUNDLED SKIDS MAY CAUSE DAMAGE TO THE PANEL FINISH AND IS NOT ACCEPTABLE.

NOTE: DO NOT STAND PANELS ON EDGE OF JOINERY OR SAW-CUT EDGE. NEVER STORE OR HANDLE PANELS IN A HORIZONTAL POSITION.

5.4 BUNDLES SHOULD BE STACKED NO MORE THAN TWO HIGH. THE FOAM STICKERS ON THE UPPER BUNDLE SHOULD BE LOCATED IN LINE WITH THE FOAM STICKERS ON THE LOWER BUNDLE (SEE FIGURE 3, BELOW).

5.5 BUNDLES SHOULD BE FIRMLY TIED OR WEIGHTED DOWN WHEN BROKEN OPEN FOR USE.

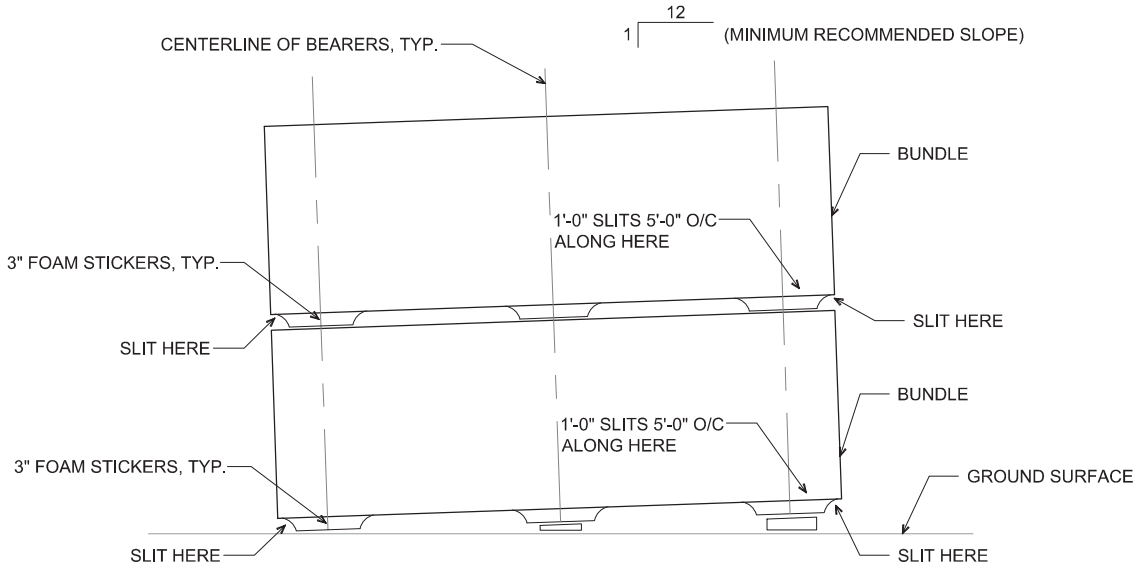

FIGURE 3

SHEET: 4 OF 11

DATE: 09/18/17

DRAWN BY: MMF

SR2 & SR3 INSULATED ROOF PANELS
GENERAL INSTALLATION GUIDE

ALL WEATHER INSULATED PANELS

6.0 ACCESSORIES AND AUXILIARY ITEMS

6.1 DUE CARE SHOULD BE AFFORDED TO THE HANDING AND STORAGE OF SMALL ITEMS (E.G. FLASHINGS, FASTENERS, SEALANTS, ETC.) THAT ARRIVE ON SITE FOR INCLUSION IN THE WORK.

6.2 COVER ALL PALLET CRATES AND/OR BOXES TO PROTECT MATERIALS FROM WEATHER BUT ALLOW FOR ADEQUATE VENTILATION TO PREVENT COLLECTION OF CONDENSATION.

7.0 SUPPORTING STEEL

7.1 FOR QUALITY PANEL INSTALLATION, THE PANEL CONTRACTOR SHALL EXAMINE THE ALIGNMENT OF THE SUPPORT STEEL BEFORE INSTALLATION OF THE ROOF PANELS. THE STEEL SHALL BE ALIGNED TO PER THE TOLERANCES ESTABLISHED IN THE AISC CODE OF STANDARD PRACTICE, SECTION 7, AND THE SUPPLEMENT MODIFICATION CONTROL SECTION 7.11.3, ADJUSTABLE ITEMS. THE MAXIMUM DEVIATION OF STEEL ALIGNMENT SHOULD BE LIMITED TO -0, + 3/16" FROM THE CONTROL WITH AN 1/8" MAXIMUM CHANGE IN DEVIATION FOR ANY MEMBER OF ANY 10'-0" RUN OF PANEL.

7.2 ANY VARIANCE(S) FROM THESE TOLERANCES CAN AFFECT BOTH PERFORMANCE AND AESTHETICS AND MUST BE REPORTED TO THE ARCHITECT AND GENERAL CONTRACTOR AND CORRECTED BY THE GENERAL CONTRACTOR OR ACCEPTED, IN WRITING, BY THE ARCHITECT BEFORE PANEL INSTALLATION PROCEEDS.

8.0 PROTECTIVE PLASTIC FILM

8.1 ALL WEATHER INSULATED PANELS AND METAL TRIMS HAVE A TEMPORARY PROTECTIVE PLASTIC FILM. THIS PLASTIC FILM HELPS PREVENT DAMAGE DURING SHIPPING AND HANDLING.

8.2 THIS PROTECTIVE PLASTIC FILM IS NOT TO BE REMOVED UNTIL PANELS AND METAL TRIMS ARE READY FOR ERECTION.

8.3 PROTECTIVE PLASTIC FILM SHALL NOT BE EXPOSED TO DIRECT SUN FOR MORE THAN 48 HOURS AS THIS MAY CAUSE THE PLASTIC FILM TO BOND TO THE METAL PANEL FACE AND MAY BECOME MORE DIFFICULT TO REMOVE. ADDITIONALLY, PROLONGED EXPOSURE TO TEMPERATURES ABOVE 80° F IS NOT RECOMMENDED AS THIS MAY CAUSE THE PEEL COAT TO LEAVE AN ADHESIVE RESIDUE ON THE PANEL FACING(S).

NOTE: SEE SECTION 5.0 FOR INSTRUCTIONS ON PROPER STORAGE.

8.4 THE BEST WAY TO REMOVE THE PROTECTIVE PLASTIC FILM IS TO START AT A PANEL CORNER AND PEEL OFF AT A 45° ANGLE (SEE FIGURE 4, BELOW).

8.5 THE PLASTIC FILM MUST BE REMOVED FROM BOTH PANEL FACES AND METAL TRIMS (IF APPLICABLE).

8.6 ANY RESIDUE ON THE METAL FACE(S) FROM THE PLASTIC FILM WILL WEATHER OFF NATURALLY. IF DESIRED, IT CAN BE REMOVED USING A SOFT CLOTH AND WATER. IT MAY BE NECESSARY TO USE A CITRUS-BASED CLEANING SOLUTION ADDED TO THE WATER IN A SUFFICIENT DILUTION RATIO TO EFFECT COMPLETE REMOVAL OF THE ADHESIVE.

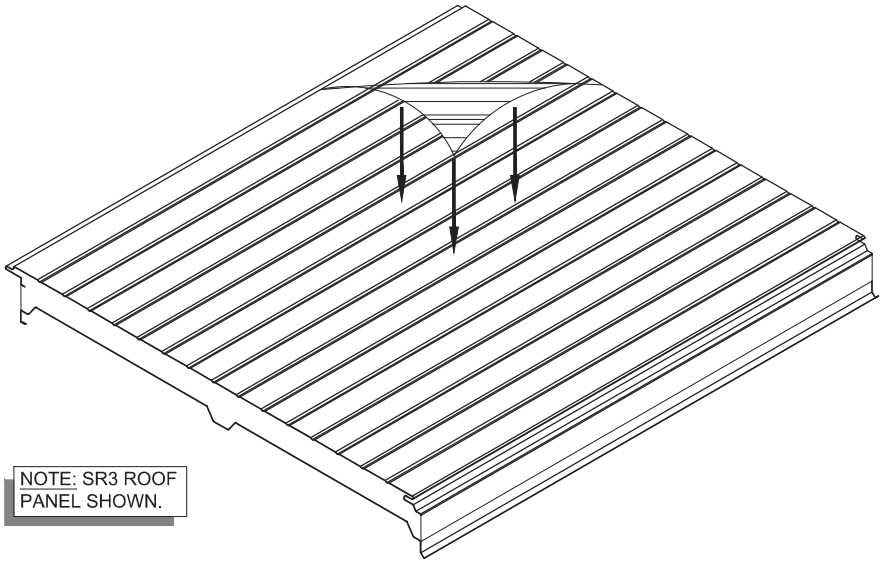

FIGURE 4

9.0 ACCESSORIES, TRIM, SEALANTS, ETC.

9.1 EXTREME CARE SHOULD BE TAKEN WHEN UNLOADING AND STORING THE FASTENERS, SEALANTS, ETC. IT IS IMPORTANT TO GUARD AGAINST DAMAGE OR MISPLACEMENT OF THE ACCESSORIES.

9.2 ALL ACCESSORIES MUST BE STORED IN A COVERED LOCATION ON THE JOBSITE AND NOT EXPOSED TO THE ELEMENTS.

10.0 PANEL CUTTING PROCEDURES

10.1 PANELS MAY BE CUT PRIOR TO INSTALLATION OR CUT IN-PLACE. ALL WEATHER INSULATED PANELS RECOMMENDS CUTTING THE PANELS PRIOR TO INSTALLATION TO MINIMIZE PANEL DAMAGE AND TO ENSURE A GOOD FIT.

10.2 ALL WEATHER INSULATED PANELS RECOMMENDS USING A CIRCULAR SAW WITH AN 8" DIAMETER, 40 TOOTH CARBIDE BLADE.

DATE: 09/18/17

DRAWN BY: MMF

SR2 & SR3 INSULATED ROOF PANELS
GENERAL INSTALLATION GUIDE

ALL WEATHER INSULATED PANELS
AWIP

10.3 TO PERFORM A GOOD CUT, FOLLOW STEPS 1 THROUGH 4 SHOWN BELOW. IF THE PANEL THICKNESS IS GREATER THAN THE SAW'S BLADE RADIUS, CUTTING SHOULD BE DONE IN TWO STEPS, CUTTING ONE SIDE AT A TIME; FOLLOW STEPS 1 THROUGH 6.

1. MEASURE THE AREA TO CUT AND MARK A LINE ON THE PANEL SURFACE.

2. USE ADHESIVE TAPE ON BOTH SIDES OF THE CUTTING LINE TO PROTECT PANEL SURFACE.

3. RECHECK MEASUREMENTS AND PROCEED WITH CUTTING OPERATION.

4. CLEAN OFF ANY METAL CHIPS LEFT ON PANEL AFTER CUTTING PROCEDURE. ANY METAL CHIPS ON THE FOAM CAN BE REMOVED BY HAND.

5. IF NECESSARY, TURN PANEL OVER AND FOLLOW STEPS 11.3 THROUGH 11.6 FOR THE OTHER SIDE OF THE PANEL.

6. FILE OR SAND OFF ANY BURRS ON THE METAL AFTER CUTTING. THE PANEL IS NOW READY FOR INSTALLATION. THE INSTALLER MUST CONSIDER THE APPLICATION OF A CONTINUOUS BEAD OF SEALANT AND, IF NECESSARY, THE CUTTING OF THERMAL BREAKS PRIOR TO INSTALLATION; SUCH TASKS SHALL BE DONE ON THE GROUND.

NOTE: DO NOT USE A RECIPROCATING SAW AS FRICTION BETWEEN THE CUTTING BLADE AND THE PANEL CREATES HEAT AND MAY DAMAGE THE PAINTED SURFACE OF THE PANEL.

ROOF PANEL INSTRUCTIONS:

11.0 ROOF PANEL INSTALLATION SEQUENCE

11.1 MINIMUM ROOF SLOPE OF ½:12 REQUIRED.

11.2 SR2 AND SR3 ROOF PANELS MUST BE INSTALLED IN A SPECIFIC SEQUENCE. THIS ENSURES THE CORRECT LAPPING OF THE SIDE AND END LAPS (SEE FIGURE 5, BELOW). THE PANEL NUMBERS CORRESPOND TO THE ORDER OF INSTALLATION.

11.3 AS EACH PANEL IS INSTALLED, ALL MAIN FASTENING AND LAP FASTENING SHOULD BE CARRIED OUT. THIS IS ESPECIALLY IMPORTANT ON SR2 AND SR3 ROOF PANELS AND WILL ENSURE THAT UNNECESSARY BACK TRAFFICKING OVER THE ROOF IS AVOIDED (REFER TO SECTION 12.8).

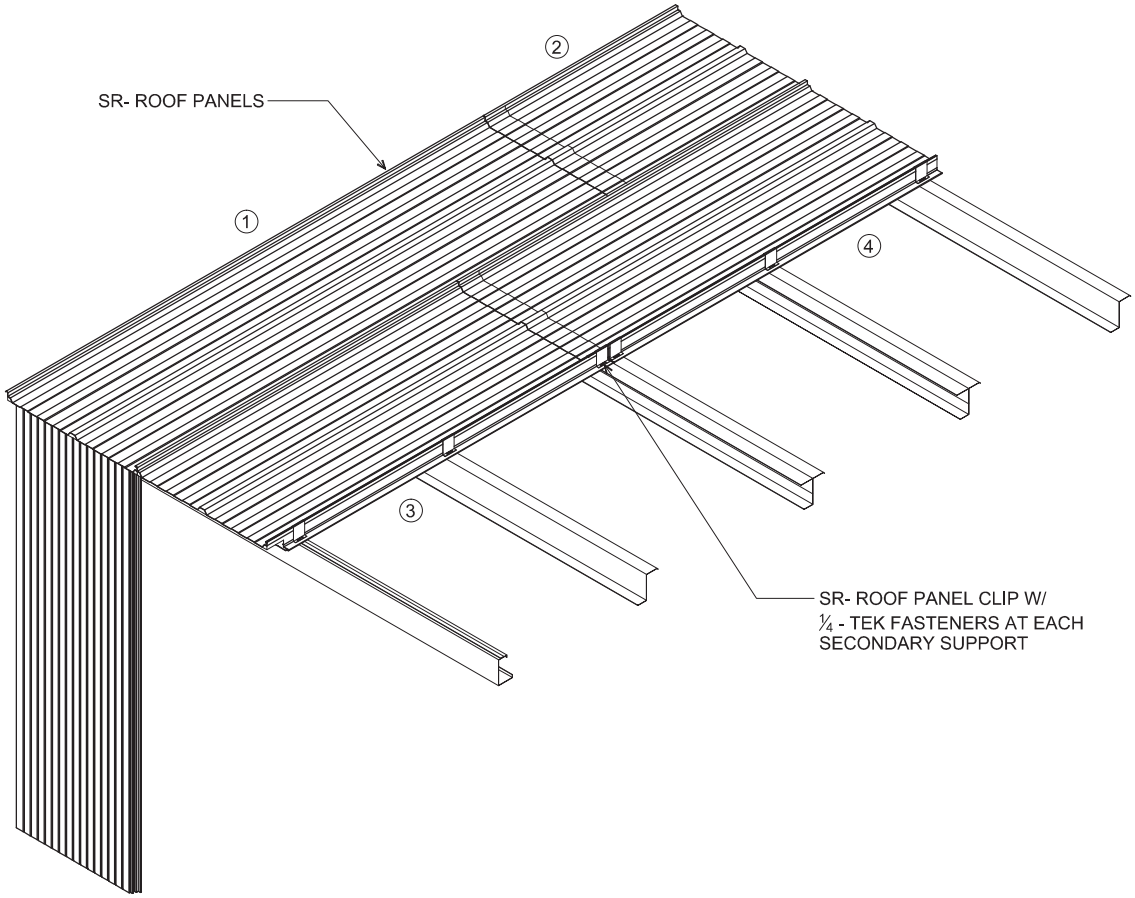

FIGURE 5

DATE: 09/18/17

DRAWN BY: MMF

SR2 & SR3 INSULATED ROOF PANELS
GENERAL INSTALLATION GUIDE

ALL WEATHER INSULATED PANELS

12.0 INSTALLATION PROCEDURE

12.1 AS EACH PANEL IS REMOVED FROM THE BUNDLE, THE MALE AND FEMALE EDGES SHOULD BE VISUALLY EXAMINED AND ANY OVERSPILL OF INSULATION SHOULD BE CAREFULLY REMOVED.

12.2 THE FIRST SR2 OR SR3 PANEL TO BE INSTALLED CAN HAVE THE OVERLAPPING STANDING RIB EDGE CUT BACK OR NOT.

12.3 THE ROOF PANEL SHOULD BE LAID FLUSH WITH THE FACE OF THE WALL PANEL AS SHOWN ON THE AWIP SHOP DRAWINGS. IT IS IMPORTANT THAT THE FIRST TIER OF PANELS ARE LAID TRUE TO LINE, PROPERLY LINED WITH A STRING TO ENSURE A TRUE AND NEAT RUN.

12.4 THE STARTER PANEL SHOULD BE FASTENED AS SHOWN ON THE AWIP SHOP DRAWINGS. THE PANEL SHOULD BE FASTENED AT EACH PURLIN AT THE RAKE EDGE.

12.5 SQUARE EACH PANEL BEFORE INSTALLING FASTENERS. PRIOR TO INSTALLATION, PANELS MAY NEED TO BE PLACED IN A SHADED AREA TO PREVENT EXCESSIVE THERMAL BOW WHICH MAY HINDER PANEL ENGAGEMENT.

12.6 IF PRE-DRILLING IS REQUIRED, USE THE DRILL BIT SIZES LISTED BELOW.

MATERIAL	FASTENER TYPE	DRILL
18 GA. TO 16 GA.	¼ - 14 HEX HEAD TEK 3 SELF-DRILLING FASTENER W/ SEAL WASHER	5/32" Ø PILOT
14 GA.	¼ - 14 HEX HEAD TEK 3 SELF-DRILLING FASTENER W/ SEAL WASHER	3/16" Ø PILOT
12 GA.	¼ - 14 HEX HEAD TEK 3 SELF-DRILLING FASTENER W/ SEAL WASHER	# 3 DRILL
11 GA.	¼ - 20 HEX HEAD TEK 5 SELF-DRILLING FASTENER W/ SEAL WASHER	# 3 DRILL
3/16" TO 3/8"	¼ - 20 HEX HEAD TEK 5 SELF-DRILLING FASTENER W/ SEAL WASHER	# 1 DRILL
3/8" & HEAVIER	¼ - 20 HEX HEAD TEK 5 SELF-DRILLING FASTENER W/ SEAL WASHER	0.231" PILOT

12.7 APPLY ⅛" DIAMETER BEAD OF NON-SKINNING BUTYL SEALANT DIRECTLY UNDERNEATH SR JOINT CLIP. INSTALL THE THERMALLY-BROKEN STAINLESS STEEL SR JOINT CLIP AS SHOWN IN FIGURE 6. FASTEN DOWN SR CLIP WITH SUPPLIED FASTENERS PER THE ROOF PANEL FASTENING SCHEDULE AND CONNECTIONS DETAILS SHOWN ON THE ALL WEATHER INSULATED PANELS SHOP DRAWINGS. USE A STANDARD 0 TO 800 RPM VARIABLE SPEED SCREW GUN WITH 4 TO 5 AMPS AND A POSITIVE CLUTCH OR DEPTH LOCATING NOSE TO DRIVE FASTENERS. DO NOT USE IMPACT TYPE GUNS. DO NOT OVER-TIGHTEN.

12.8 THE FASTENING PATTERN WILL DEPEND ON THE PANEL THICKNESS, SPAN, SUBSTRATE, AND DESIGN LOADS. CONSULT YOUR ALL WEATHER INSULATED PANELS REPRESENTATIVE OR THE FACTORY FOR ALLOWABLE PANEL AND FASTENER DESIGN LOADS.

12.9 AFTER SR CLIP HAS BEEN PLACED, PRE-CRIMP OVER MALE LEG USING ½" HAND CRIMPING TOOL. APPLY 3/8" x 3/32" BUTYL TAPE SEALANT ON TOP OF 90° FORMED MALE EDGE AND CLIP OR ¼" DIAMETER NON-SKINNING BUTYL SEALANT ON THE EXTERIOR FEMALE OVERLAP. BUTYL SEALANT WILL BECOME MORE VISCOUS IN COLD-WEATHER ENVIRONMENTS AND MAY BE DIFFICULT TO FULLY ENGAGE THE PANEL JOINTS. BUTYL SEALANT SHOULD BE KEPT IN WARM, TEMPERATURE-CONTROLLED ENVIRONMENTS UNTIL PANEL INSTALLATION. REFER TO PROJECT-SPECIFIC SHOP DRAWINGS FOR SEALANT TYPE AND PLACEMENT.

12.10 ADEQUATE CAULKING AND SEALING OF PANELS AND TRIMS IS THE SOLE RESPONSIBILITY OF THE INSTALLING CONTRACTOR (CUSTOMER). ALL WEATHER INSULATED PANELS HIGHLY ADVISES PRE-INSTALLATION QUALITY CONTROL TESTING TO BE COMPLETED ON-SITE PRIOR TO COMMENCING WITH INSTALLATION TO ENSURE A COMPLETE SEALANT BRIDGE FROM METAL TO METAL.

12.11 INSPECT FACTORY-CAULKED PANELS CAREFULLY PRIOR TO INSTALLATION TO ENSURE THAT THERE IS ADEQUATE SEALANT IN THE STANDING SEAM OVERLAP. IF SEALANT WILL NOT BRIDGE METAL TO METAL, PLEASE CALL YOUR ALL WEATHER INSULATED PANELS REPRESENTATIVE BEFORE CONTINUING. DO NOT INSTALL PANELS THAT ARE NOT PROPERLY CAULKED.

12.12 NEST THE NEXT PANEL INTO PLACE BY PUSHING IT INTO THE LINER SIDE TONGUE AND GROOVE. THE OVERLAPPING FEMALE EDGE SHOULD NOW BE ALIGNED OVER THE FASTENED PANEL'S LEADING MALE EDGE WITH THE CLIPS SANDWICHED BETWEEN THE FOAM AND METAL EDGES.

12.13 THE SR SERIES SEAMER MANUAL FROM DI SEAMERS IS PROVIDED WITH THE ELECTRIC SEAMER KIT AND CAN BE FOUND AT WWW.AWIPSEAMERS.COM. FOLLOW THE DI ROOF SEAMERS INSTRUCTIONS TO SEAM JOINTS TO A 90º BEND. TO PREVENT THE POSSIBILITY OF PANELS BEING BLOWN OFF THE BUILDING OR WIND-DAMAGED, IT IS HIGHLY RECOMMENDED THAT SEAMING BE COMPLETED AS SOON AS POSSIBLE. THIS WILL ENSURE THAT THE ROOF ASSEMBLY IS ADEQUATELY SECURED DURING INSTALLATION.

NOTE: SEAMING OF SR PANELS SHOULD NOT BE ATTEMPTED AT TEMPERATURE RANGES ABOVE 120° F OR BELOW 20°F DUE TO CHANGES IN VISCOSITY OF THE BUTYL TAPE AND SEALANT AT EXTREME TEMPERATURES.

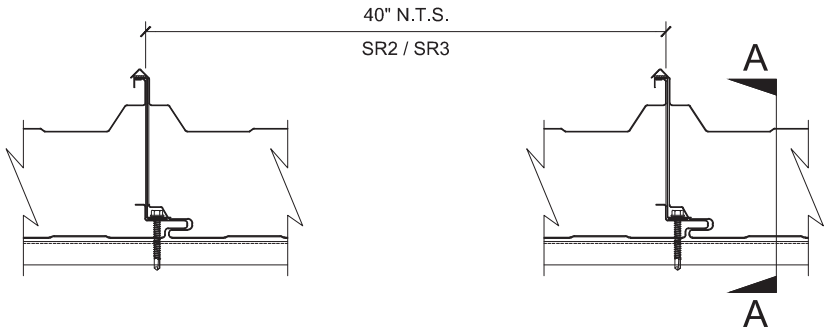

FIGURE 6

DATE: 09/18/17

DRAWN BY: MMF

SR2 & SR3 INSULATED ROOF PANELS
GENERAL INSTALLATION GUIDE

ALL WEATHER INSULATED PANELS

NOTE: DO NOT OVER-DRIVE FASTENERS. IF THE METAL AT THE EDGE OF THE PANEL IS DEFORMED OUT OF PLANE, THE ADJACENT PANEL WILL BE DIFFICULT TO ENGAGE AND WILL NOT SEAM. AFTER SR CLIP HAS BEEN INSTALLED OVER MALE LEG OF STANDING SEAM PANEL, PRE-CRIMP, USING ½" HAND CRIMPING TOOL.

NOTE: ADJACENT PANEL NOT SHOWN FOR CLARITY.

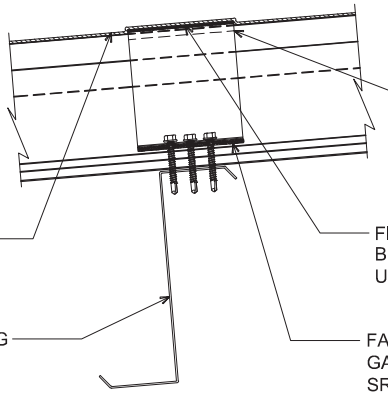

SECTION A-A

12.14 AFTER DRILLING OR CUTTING PANELS, ALWAYS REMOVE METAL CHIPS AND FOAM DUST THAT HAS FALLEN ON PANELS OR TRIMS.

12.15 IF THE ROOF SYSTEM CONSISTS OF ONE COURSE / ROW OF PANELS, PROCEED TO THE NEXT PANEL AND REPEAT STEPS 12.5 THROUGH 12.14 UNTIL THE ROOF IS COMPLETE. IF THE SYSTEM CONSISTS OF MORE THAN ONE COURSE / ROW OF PANELS, DO NOT FASTEN THE PANELS TO THE SUPPORT MEMBERS AT THE END LAP; REFER TO SECTION 13.0 FOR SR2 AND SR3 ROOF PANEL END LAP FASTENING.

12.16 AFTER ALL PANELS ARE INSTALLED, FASTEN THE EAVE, RAKE, AND PEAK TRIMS, RESPECTIVELY. THE TRIM SHOULD BE FASTENED AS SHOWN ON THE AWIP SHOP DRAWINGS.

12.17 IN WET OR HIGH HUMIDITY CLIMATES, IT IS ESSENTIAL THAT EXPOSED PANEL AND TRIM CUT ENDS BE FIELD-COATED WITH A CLEAR ACRYLIC PAINT FINISH TO HELP PREVENT RUSTING.

13.0 ROOF PANEL END-LAP FASTENING

13.1 WHEN THE ROOF SYSTEM CONTAINS MORE THAN ONE COURSE / ROW OF PANELS THE FOLLOWING STEPS SHOULD BE OBSERVED FOR THE FASTENING OF THE PANEL END-LAP.

13.2 STAGGER THE PANELS PER THE PANEL INSTALLATION SEQUENCE OUTLINED IN SECTION 11.0. INSTALL THE PANEL FASTENERS PER SECTION 12.0 (EXCEPT FOR FASTENERS AT THE END LAP SUPPORT).

13.3 USE METAL SNIPS TO CUT OFF LOWER COURSE SR2 OR SR3 ROOF PANEL EXTERIOR FEMALE OVERLAP BACK 5 ¾" AND EXTERIOR VERTICAL MALE EDGE BACK 6" TO ENSURE PROPER NESTING AND LAPPING OF UPPER COURSE SR2 OR SR3 ROOF PANEL. REFER TO SR2 AND SR3 ROOF ISOMETRIC FOR ADDITIONAL DETAILS.

13.4 PRIOR TO PLACING THE UPPER COURSE / ROW OF PANELS, THE END-LAPS OF THE LOWER COURSE PANELS MUST BE CAULKED. THE CAULKING ON THE END-LAP SHOULD BE MARRIED TO THE CAULKING IN THE PANEL SIDE OVERLAP. APPLY CAULKING IMMEDIATELY PRIOR TO UPPER COURSE PANEL INSTALLATION.

NOTES:
1. ALL SURFACES TO BE CAULKED MUST BE CLEAN AND DRY.
2. APPLY END-LAP SEAL TO PANEL SURFACE TO BE LAPPED.
3. SEALANT STRIPS SHOULD OVERLAP ONE ANOTHER SIDE BY SIDE (MINIMUM 1").

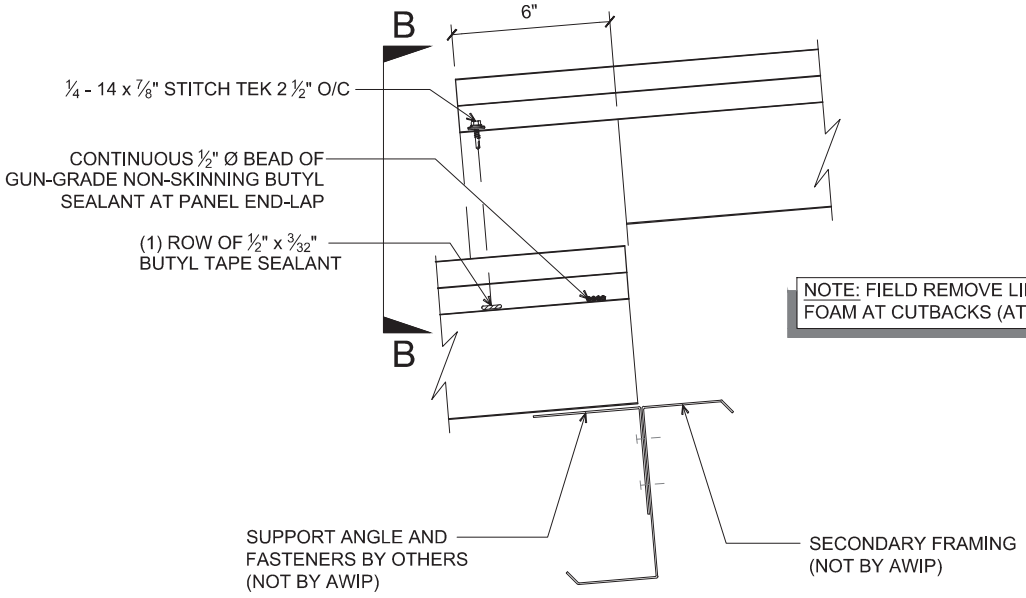

NOTE: FIELD REMOVE LINER AND FOAM AT CUTBACKS (AT LAPS).

FIGURE 7

SHEET: 8 OF 11

DATE: 09/18/17

DRAWN BY: MMF

SR2 & SR3 INSULATED ROOF PANELS GENERAL INSTALLATION GUIDE

ALL WEATHER INSULATED PANELS

AWIP

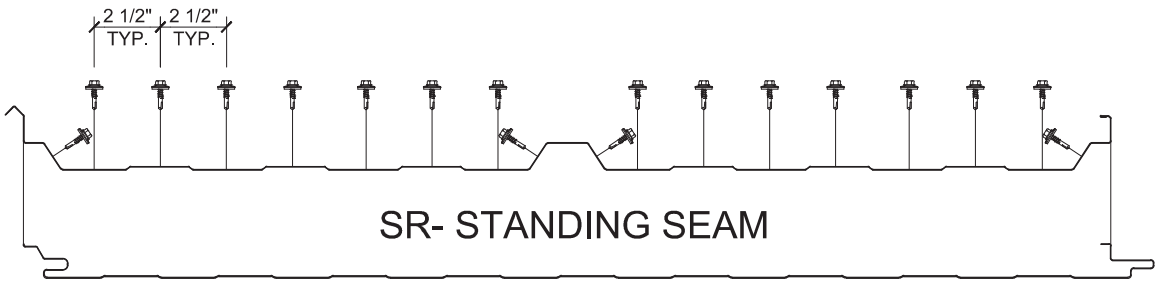

SECTION B-B

13.5 IF THE RIDGE CAP DETAIL IS TO BE USED, PLACE THE INSIDE RIDGE CAP AND CAULKING BEAD AS SHOWN ON THE ALL WEATHER INSULATED PANELS SHOP DRAWINGS. THE CAULKING BEAD SHOULD BE MARRIED TO THE BEAD IN THE OVERLAPPING RIB AS THE PANELS ARE SET IN PLACE.

13.6 ALL WEATHER INSULATED PANELS THAT INCORPORATE END LAPS WILL ARRIVE AT THE JOB SITE WITH THE FOAM AND LINER FACE IN PLACE. THE LINER FACE OF THE UPPER COURSE PANEL WILL HAVE A FACTORY SAW CUT 3" TO 6" FROM THE END OF THE PANEL (SEE FIGURE 8). REMOVE THE METAL AND FOAM AT THE END OF THE PANEL. CAREFULLY REMOVE ANY FOAM THAT REMAINS ON THE METAL SKIN TO ENSURE A POSITIVE AIR AND WATER INFILTRATION SEAL. ENSURE PANEL TO EXTERIOR FACING TRANSITION IS FREE OF EXCESS FOAM AND DEBRIS (SEE FIGURE 8A) TO ALLOW PANEL ENDS TO JOIN TOGETHER TIGHTLY FOR FOAM-TO-FOAM CONTACT.

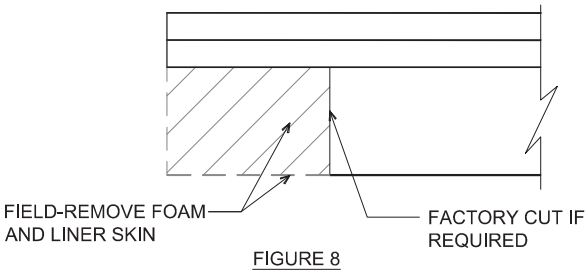

FIGURE 8

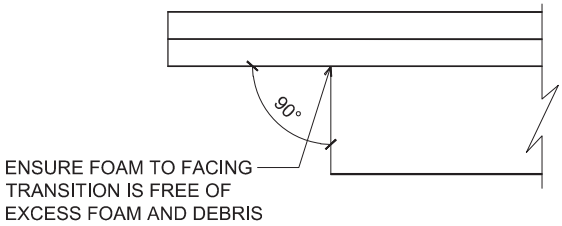

FIGURE 8A

13.7 AFTER PREPARING THE UPPER COURSE PANEL, PLACING THE CAULK, AND CLIPPING EDGES, SET THE UPPER COURSE PANEL IN PLACE. INSTALL SR CLIP ASSEMBLIES ON ALL SUPPORTS.

13.8 ONCE THE UPPER PANEL IS IN PLACE AND FASTENED, FASTEN DOWN THE END-LAP USING THE ¼ - 14 x ⅞" STITCH TEK FASTENER. THE FASTENERS SHOULD BE PLACED IN THE LOCATIONS SHOWN ON THE ALL WEATHER INSULATED PANELS SHOP DRAWINGS. THE FASTENER SHOULD BE PLACED APPROXIMATELY 1" FROM THE END OF THE UPPER COURSE PANEL EXTERIOR FACING SO THAT IT PENETRATES THE CAULKING AND ACHIEVES FULL COMPRESSION OF THE FACINGS AT THE LAST ROW OF CAULKING.

13.9 REMOVE ALL METAL CHIPS AND FILINGS FROM THE DRILLING OF PILOT HOLES AND FASTENING OF THE PANELS IMMEDIATELY AFTER INSTALLATION. THESE FILINGS WILL RUST AND CORRODE THE PANEL SURFACE.

13.10 PROCEED TO THE NEXT PANEL AND REPEAT STEPS 13.2 THROUGH 13.9.

13.11 AFTER ALL PANELS ARE INSTALLED. FASTEN THE EAVE, RAKE, AND PEAK TRIMS, RESPECTIVELY. THE TRIM SHOULD BE FASTENED AS SHOWN ON THE ALL WEATHER INSULATED PANELS SHOP DRAWINGS.

14.0 PEAK TRIM INSTALLATION PROCEDURE

14.1 FASTEN THE ROOF PANELS AT THE RIDGE AS SHOWN ON THE ALL WEATHER INSULATED PANELS SHOP DRAWINGS.

14.2 TEMPORARILY SET THE PEAK TRIM IN PLACE TO DETERMINE THE LOCATION OF THE CAULKING AND CLOSURE STRIPS. RUN A LINE OR SNAP A CHALK LINE ALONG THE LENGTH OF THE APEX TRIM FOR PROPER PLACEMENT OF THE CAULKING AND CLOSURE STRIPS.

14.3 APPLY BUTYL TAPE ONTO THE PANEL AS SHOWN ON ALL WEATHER INSULATED PANELS SHOP DRAWINGS IN PREPARATION FOR THE CLOSURE STRIP. ALL SURFACES TO RECEIVE CAULK AND CLOSURE STRIPS.

14.4 SEAT THE CLOSURE STRIP FIRMLY 0NTO THE BUTYL TAPE TO ENSURE A CONTINUOUS SEAL. IF VOIDS EXIST, ADD ADDITIONAL BUTYL SEALANT AND RESEAT THE CLOSURE CORRECTLY.

14.5 PLACE BUTYL TAPE ONTO THE CLOSURE STRIP AND PLACE THE APEX TRIM AS SHOWN ON ALL WEATHER INSULATED PANELS SHOP DRAWINGS. FASTEN THE APEX TRIM AT EACH HI RIB WITH A 1/4- 14 x ⅞" STITCH TEK FASTENER. AT THE END OF THE APEX TRIM, PLACE TWO BEADS OF THE CAULK OR TAPE SEALANT 2" FROM THE END AND OVERLAP THE NEXT APEX TRIM APPROXIMATELY 4". FASTEN THE OVERLAPS DOWN WITH ¼ - 14 x ⅞" STITCH TEK FASTENERS AS REQUIRED.

14.6 IMMEDIATELY REMOVE ANY METAL CHIPS OR FILINGS FROM THE SCREWS OR SHEET METAL FABRICATION AS THEY WILL RUST AND CORRODE THE PANEL SURFACE.

DATE: 09/18/17

DRAWN BY: MMF

SR2 & SR3 INSULATED ROOF PANELS
GENERAL INSTALLATION GUIDE

ALL WEATHER INSULATED PANELS
AWIP

15.0 MISCELLANEOUS INFORMATION

15.1 TO PREVENT GALVANIC ACTION, ISOLATE ANY ALUMINUM TRIM SURFACE(S) FROM SURFACE OF PANEL SUPPORT STEEL USING ONE OF THE FOLLOWING METHODS:

1) AN APPROVED SEALANT OR SEALANT TAPE.
2) A NON-ABSORBENT GASKET.
3) DUCT TAPE OR EQUIVALENT TYPE TAPE.
4) PAINT THE INCOMPATIBLE METAL WITH A COATING OF HEAVY BODIED BITUMINOUS PAINT.

15.2 GAS BUBBLES (BLISTERS) ON FOAM PANELS ARE AN INDUSTRY-WIDE, SPORADIC PROBLEM. IF THEY OCCUR ON THIS PROJECT, THEY CAN EASILY BE REPAIRED BY DRILLING A 1/16" DIAMETER BY 1 3/4" DEEP HOLE NEAR THE BOTTOM OF THE GAS BUBBLE IN THE EXTERIOR METAL FACING TO ALLOW THE TRAPPED GAS TO BE RELEASED. THE REPAIR IS COMPLETED BY APPLYING A SMALL AMOUNT OF CLEAR ACRYLIC TOUCH-UP PAINT TO THE RAW EDGE OF THE DRILL HOLE. GAS BUBBLES SHOULD BE REPAIRED AS SOON AS POSSIBLE AS THEY WILL CONTINUE TO GROW UNTIL CORRECTED. GAS BUBBLES ARE NOT A CAUSE FOR REJECTION OF THE PANEL(S).

15.3 FLATNESS: OIL CANNING OR "SCOLLOPING" IS AN INHERENT CONDITION OF LIGHT GAUGE COLD-FORMED METAL PRODUCTS, PARTICULARLY THOSE WITH BROAD, FLAT AREAS. OIL CANNING MAY BE AN AESTHETIC ISSUE, PARTICULARLY IN CONDITIONS OF ANGLED LIGHT AND DOES NOT AFFECT THE STRUCTURAL INTEGRITY OR THERMAL PERFORMANCE OF THE PANELS. AWIP HAS ADOPTED FLATNESS TOLERANCE PARAMETERS BASED ON INDUSTRY STANDARDS AND PROVIDED BY THEIR COIL STEEL SUPPLIERS. THEREFORE, OIL CANNING AND PERCEIVED WAVINESS THAT ARE WITHIN AWIP QC TOLERANCES ARE NOT GROUNDS FOR PANEL OR TRIM REJECTION.

16.0 EXPOSURE TO HEAT OR FLAME

16.1 ALTHOUGH ALL WEATHER INSULATED PANELS URETHANE CORE PANELS ARE ACCEPTABLE FOR USE IN NON-COMBUSTIBLE BUILDING ASSEMBLIES IN ACCORDANCE WITH THE INTERNATIONAL BUILDING CODE (IBC) AND HAVE BEEN EXHAUSTIVELY TESTED FOR FIRE RESISTIVITY BASED ON THEIR END USE, THEY ARE NOT NON-COMBUSTIBLE IN AND OF THEMSELVES. THEY ARE NOT "FIRE RATED" PER ASTM E119. THEREFORE, THEY SHALL NOT BE EXPOSED TO EXTREMELY HIGH TEMPERATURES OR DIRECT FLAME AT ANY TIME. SIMPLY STATED, DO NOT USE A WELDING TORCH ON OR NEAR INSULATED PANELS ANY MORE THAN YOU WOULD ON A WOODEN BUILDING ASSEMBLY. REFER TO PANEL TEST DATA INFORMATION UNDER "FIRE" FOR DETAILED INFORMATION ON IGNITION, HEAT OF COMBUSTION, AND SURFACE BURNING.

17.0 CLEANING PANELS

17.1 AFTER INSTALLATION, SURFACES MUST BE CLEANED TO REMOVE ANY METAL CHIPS TO PREVENT ANY POSSIBLE OXIDATION. A WET, SOFT CLOTH IS RECOMMENDED.

18.0 MAINTENANCE

18.1 PROPER INSTALLATION AND MAINTENANCE ARE EXTREMELY IMPORTANT TO OBTAIN THE BEST PERFORMANCE AND APPEARANCE FROM THE INSULATED PANELS.

18.2 DIRT, OIL, GREASE, FINGERPRINTS OR ANY OTHER KIND OF CONTAMINANT MUST BE COMPLETELY REMOVED WHEN THE INSTALLATION IS FINISHED TO MAXIMIZE COATING(S) PERFORMANCE.

18.3 THE BUILDING WILL REQUIRE PERIODIC MAINTENANCE ACCORDING TO SITE CONDITIONS (U.V EXPOSURE, DIRT, SMOKE, CORROSIVE ATMOSPHERE, ETC). IF FURTHER ASSISTANCE IS REQUIRED, PLEASE CONSULT ALL WEATHER INSULATED PANELS' TECHNICAL DEPARTMENT.

18.4 TO REMOVE SUPERFICIAL OXIDATION AND TOUGH STAINS, IT IS RECOMMENDED TO USE A REGULAR HOUSEHOLD CLEANER FOLLOWED BY A THOROUGH RINSING. WIRE BRUSHES AND/OR ABRASIVE MATERIAL WILL DAMAGE THE PAINTED COATING.

18.5 IF "TOUCH-UP" PAINT IS REQUIRED, CONTACT ALL WEATHER INSULATED PANELS TO OBTAIN A PAINT CHIP FOR COLOR-MATCHING.

18.6 SINCE METAL-FACED INSULATED PANELS ARE A MODULAR SYSTEM, THEY REQUIRE JOINT AND INTERSECTING CAULKING TO MINIMIZE POTENTIAL LEAKS IN THE BUILDING ENVELOPE. THE FLEXIBLE SEALANT MATERIALS TYPICALLY USED ARE GUN-GRADE OR RIBBON-TYPE AND EITHER BUTYLOID, SILICONE, OR URETHANE-BASED, DEPENDING ON THE SPECIFIC APPLICATION. IT IS ESSENTIAL TO INSPECT CRITICAL AREAS SUCH AS ROOF ENDLAPS, RIDGES, OR ANY TRIM USED TO COMPLETE THE BUILDING ENVELOPE EVERY 24 MONTHS AFTER THE FIRST 60 MONTHS IN-PLACE. OVER TIME, SEALANTS WILL SHRINK, CRACK, AND LOSE ADHESION WHEN SUBJECTED TO HEAT AND COLD, FREEZE / THAW, EXPANDING / CONTRACTING METAL, MOISTURE, AND CHEMICAL CONTAMINANTS. SEALANTS CAN BE REMOVED AND REPLACED WHERE PRACTICAL OR AREAS CAN BE FACE-SEALED FROM THE INTERIOR. FOR SPECIFIC RECOMMENDATIONS OF SEALANT TYPE(S) AND / OR APPLICATION(S), CONTACT YOUR ALL WEATHER INSULATED PANELS REPRESENTATIVE.

18.7 ONE OF THE MOST DETRIMENTAL CLIMATOLOGICAL CONDITIONS TO ANY TYPE OF BUILDING IS SNOW AND ICE BUILDUP ON THE ROOF WHICH MUST BE PROPERLY MAINTAINED EVEN WHEN DESIGNED TO A SPECIFIC LOAD. THE ENTIRE SNOW ACCUMULATION ON A ROOF CAN SUDDENLY RELEASE DUE TO THE SNOW-MELT PHENOMENA. THIS RELEASE CAN NOT ONLY CRUSH OR TEAR OFF TRIM, FLASHINGS, FASTENERS OR OTHER ACCESSORIES - BUT CAUSE HARM TO PEOPLE AND DAMAGE PROPERTY BELOW THE ROOF. IT IS IMPORTANT THAT SNOW REMOVAL BE CAREFULLY PERFORMED AS NEEDED TO PREVENT DAMAGE TO THE ROOF. AWIP DOES NOT MAKE ANY RECOMMENDATION ON WHEN TO REMOVE SNOW FROM ROOFS. IT IS UP TO THE INDIVIDUAL PROPERTY OWNER TO CONSIDER THE BENEFITS AND DANGERS OF SNOW REMOVAL AND DECIDE THEIR OWN COURSE OF ACTION. USE EXTREME CAUTION AND CARE.

DATE: 09/18/17

DRAWN BY: MMF

SR2 & SR3 INSULATED ROOF PANELS
GENERAL INSTALLATION GUIDE

ALL WEATHER INSULATED PANELS
AWIP

SR ROOF PANEL PROFILES

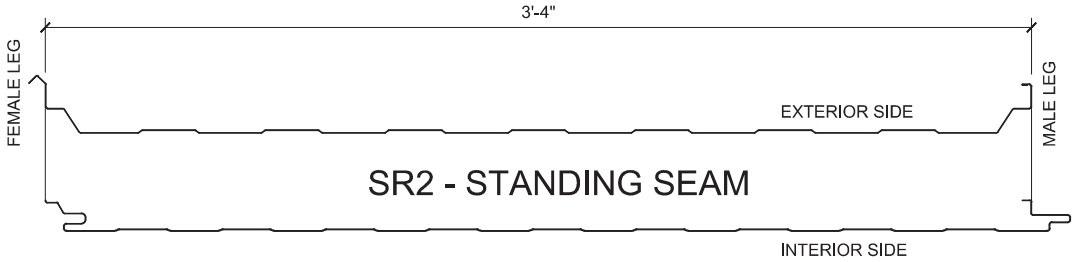

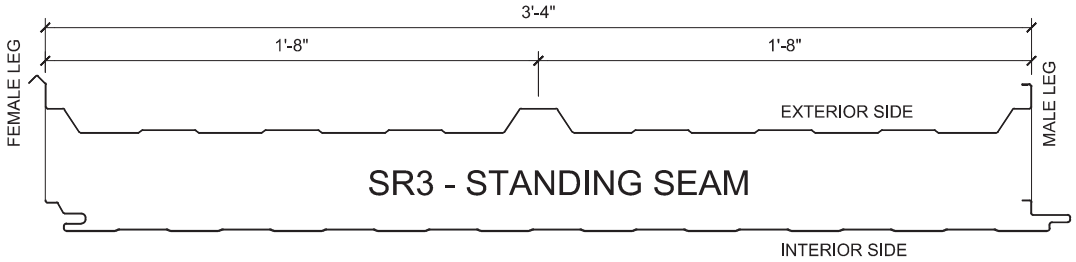

SHEET: 11 OF 11

DATE: 09/18/17

DRAWN BY: MMF

SR2 & SR3 INSULATED ROOF PANELS GENERAL INSTALLATION GUIDE

ALL WEATHER INSULATED PANELS

AWIP

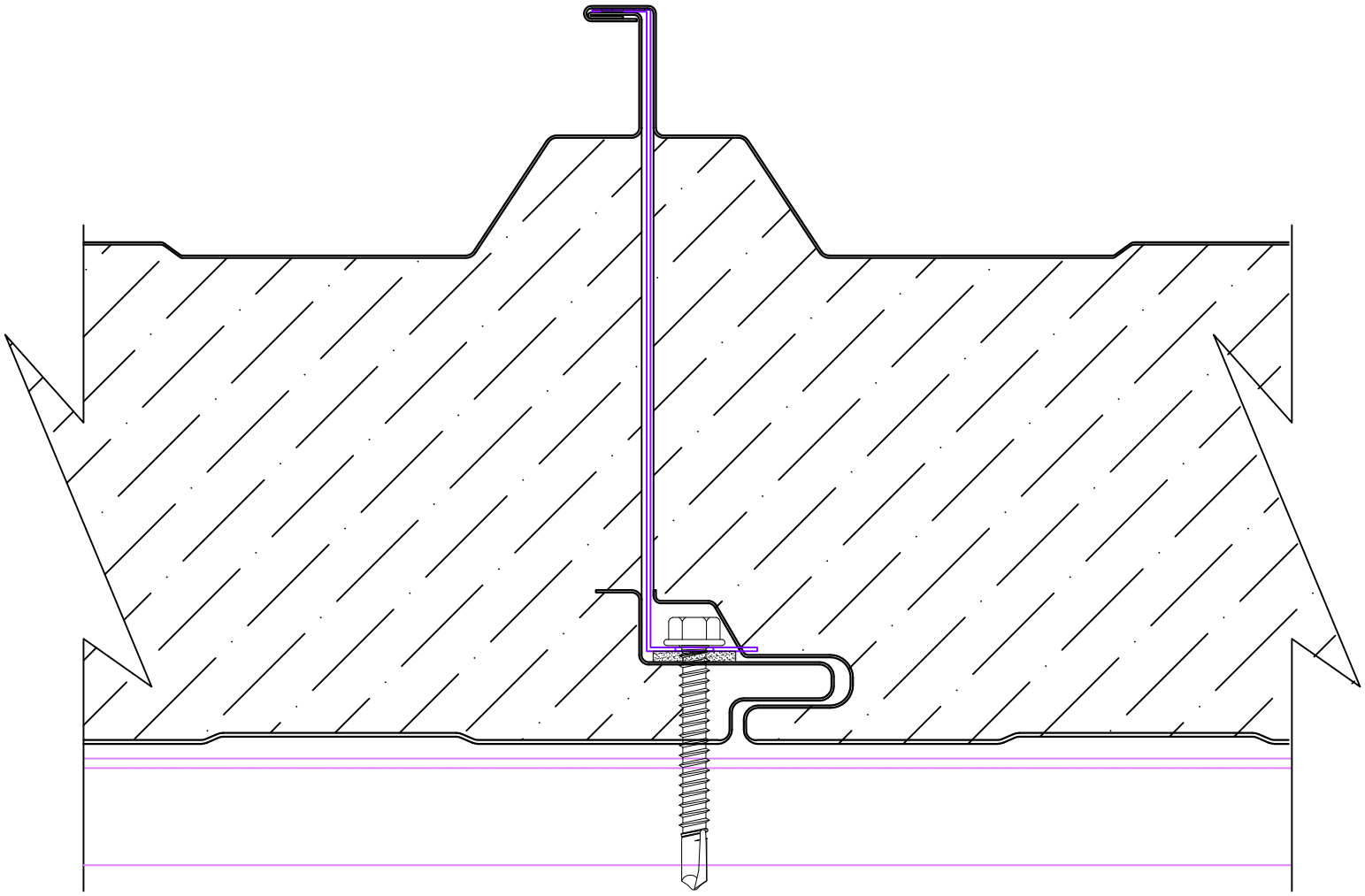

Panel Seam

NOTE: UNDIMENSIONED ANGLES ARE 90º

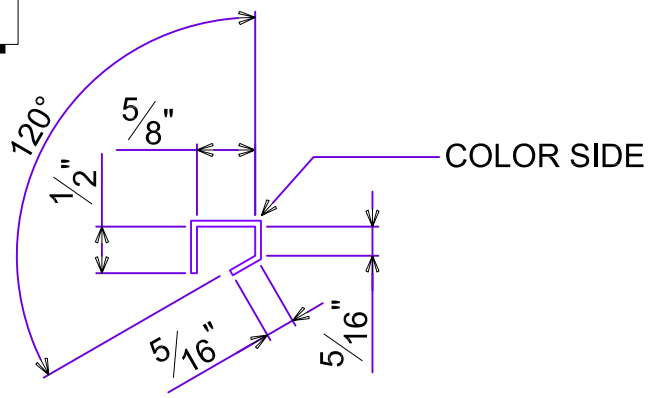

SECTION VIEW

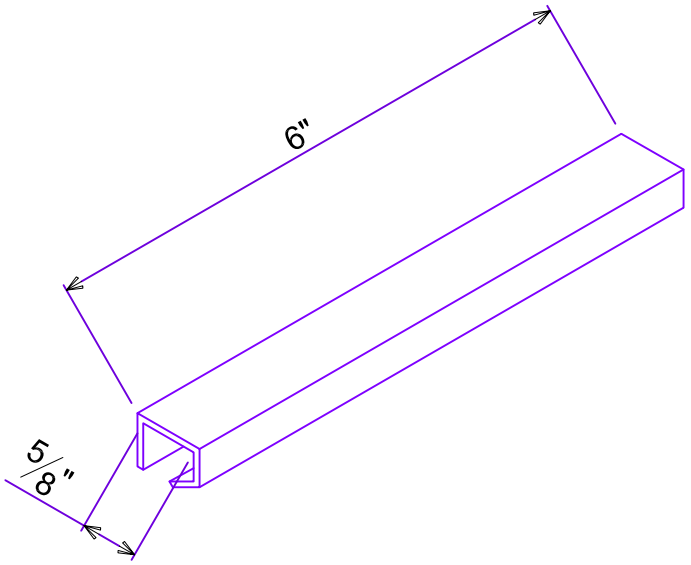

ISOMETRIC VIEW

MARK NO.	EC-01 STANDING SEAM ENCHANCEMENT CLIP
MATERIAL	20 GAUGE STEEL
FINISH	PAINTED TO MATCH
DRAWN BY	BCN
ISSUE DATE	05/22/12